AST - Current transformers line

Technical comments

Modern design, versatility and greater safety are the distinctive features of the new AST-Line. In developing we have moreover retained our reliable CELSA secondary terminal.

Greater safety

The joining point where the two halves of the housing meet inside the primary bar opening is crucial to safety. Quite in accordance with CELSA´s motto - safety is built into our products - the two halves of the housing are not aligned with a butt joint, instead they are made to overlap in the new AST-Line.

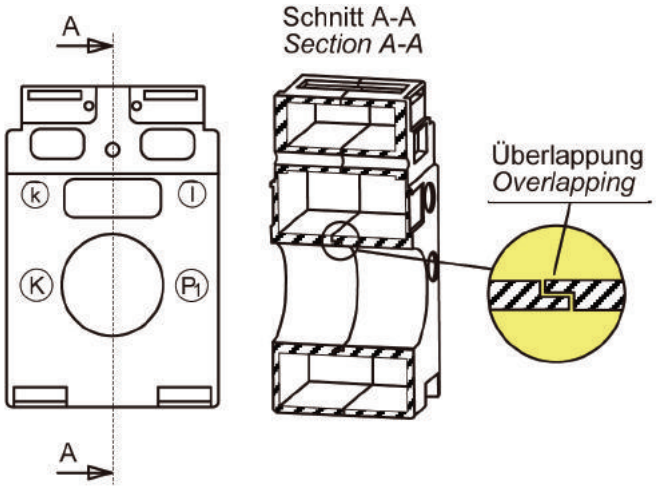

Versatility

Current transformers are frequently secured with the help of a lug through which a clamping screw fits onto the primary bar. You must have noticed what a nuisance this lug can be, for instance when you want to install the CT behind fuse switch disconnectors, fuse trips or between bar overlaps and exits.

The new current transformer of the CELSA AST-Line have their own solution to this problem. The conventional fixing device has been designed with a form-locking guide so that - if necessary - it can simply be pulled out.

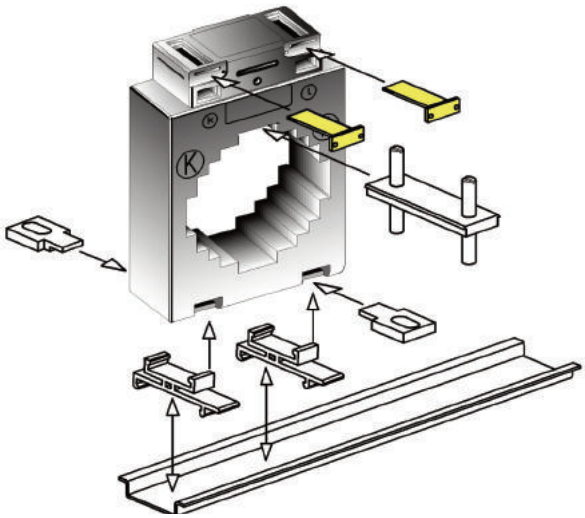

Insulated protective caps for primary fixing bolts

To protect against unintentional contact the bolts of the primary fixing devices can be covered by protective insulation caps. These should be pressed only on the already fastened bolts, not between bolts and bars.

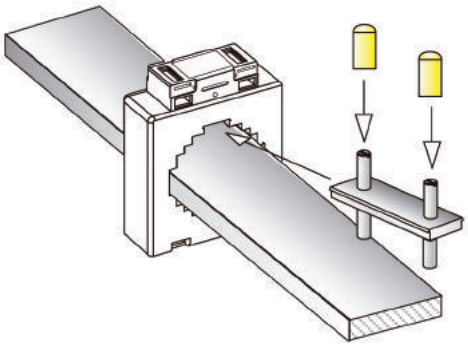

Extended secondary terminal cover

When using the CT as a tube type CT you may wish to increase the air gaps and creepage distances between secondary terminals and primary bars. You can do so by adding protective terminal covers over the CT openings on the front and back as shown.

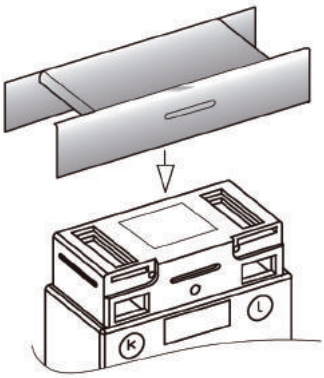

Celsa Messgerate España S.L.
www.celsamessgerate-spain.com
info@celsaspain.com / +34 96 130 93 78

AST - Current transformers line

Secondary terminal openings.
The connection of secondary wire leads to their corresponding terminals is normally done by sliding them into the rectangular openings on the front or the back. If this way of connection is prohibited for instance due to blocking when mounted right behind a line of fuses the secondary wire leads equipped with clamps can also be introduced into the lateral slots for secondary terminal connection as shown

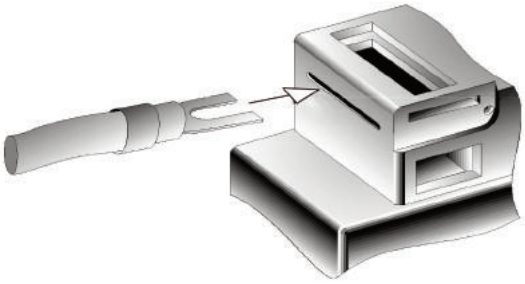

The CELSA Secondary terminal
In this clamping system pressure is transmitted by means of a nut (pad) to the ends of the conductor (lift principle). The conductor is therefore loaded only under pressure and cannot be demaged by rotating components. When opened, there are two clamping spaces of 2.5mm x 4mm each in cross-section.

Thanks to our clamping system the ends of the conductors are clamped over a wide area which ensures lower contact resistance. Pressure forces of several hundret Newtons are reached. In this way conductors even with multiple, fine and extremely fine wires are so well compressed that no harmful gases can penetrate to cause corrosion. It therefore provides an extremely long-lasting connection even in aggressive indu-strial environment.

The plus-minus slot of the M5 (2 Nm) screws allows easy of handling. At the AST-Line both, screws and nuts are designed in such a way to prevent unintentional loosening.

The secondary terminals are made of brass with nickel as a double terminal construction. This double construction permits a very easy short circuit of the current transformer during operation in order to carry out work on the secondary circuit.

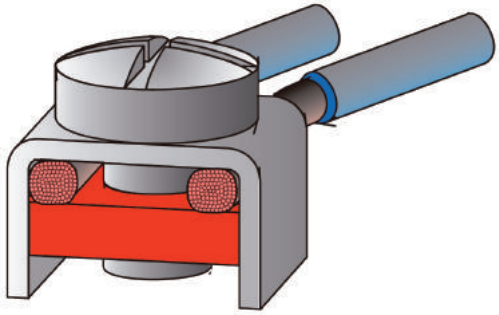

General Features

Of course all AST current transformers comply with EN 60044, DIN VDE 0414, VDE 1000, DIN 42600 as well as the regulations VBG 4, VDE 0106 part 100..

General Mechanical Feature
- unbreakable plastic casing, polyamide
- difficult to inflame, according to UL 94 V0 and selfextinguishing
- nickel-plated secondary terminals with plus minus screws (2 Nm)
- integrated secondary terminal caps

General Electrical Features
- rated frequency 50-60Hz (other frequencies on request)
- class of insulation E (other classes on request)
- rated short-time thermal current Ith = 60 . IN
- nominal surge current Idyn = 2.5 . Ith.
- highest voltage for equipment Um = 0,72kV
- rated power-frequency withstand voltage 3kV/1min
- instrument security factor FS5 or FS10

All CELSA current transformers are dimensioned (exceptionell some marked types) in accordance with VDE 0414 for a rated continuous thermal current of $I_D = 1{,}2 \cdot I_N$.

Included in delivery:
- secondary therminal covers

Accesories:
- primary fixing device or mounting feet
- Mounting feets to DIN Rail
- cost-effective snap-on mounting brackets out of highly reinforced fibre glass macrolon for snapping on a profile mounting bar according to EN 50022-35 and DIN 46277
- copper tubes in various sizes for using a current transformer as a tube type current transformer
- copper primary bars in various sizes
- insulated protective caps for primary fixing bolts
- protective terminal cover to increase the air gaps and creepage distances if using the CT as tube type CT.

Celsa Messgerate España S.L.
www.celsamessgerate-spain.com
info@celsaspain.com / +34 96 130 93 78